38 565 SH0 **SKATE AIR FLUSH PLATE**

PRODUCT DESCRIPTION

- Colour: alpine white
- for single flush actuation
- for pneumatic drop valve
- for horizontal installation
- 156 x 197 mm
- made of ABS
- GROHE Water Saving - Less water, perfect flow

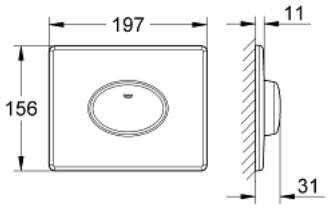

38 565 SH0 **SKATE AIR FLUSH PLATE**

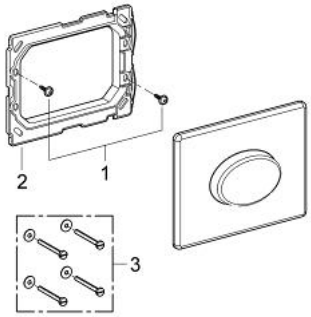

SPARE PARTS, July 2003 – now

1: Screw (Spare part-nr. 6636200M)

2: Frame (Spare part-nr. 43207000)

3: Fixing set (Spare part-nr. 4308500M)*

* Optional accessories