33 930 002 **EUROPLUS SINGLE-LEVER SINK MIXER 1/2"**

PRODUCT DESCRIPTION

- Colour: Chrome
- medium spout
- monobloc installation
- GROHE Long-Life finish
- GROHE SilkMove 35 mm ceramic cartridge
- SpeedClean mousseur
- adjustable flow rate limiter
- swivel cast spout
- swivel area 140°
- flexible connection hoses
- rapid installation system

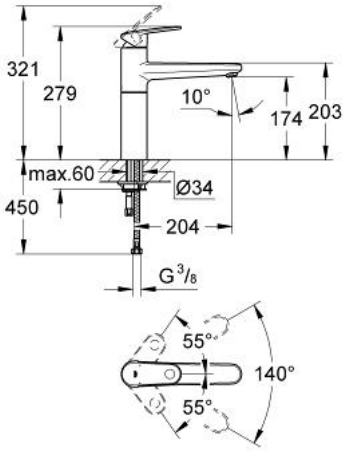

33 930 002 **EUROPLUS SINGLE-LEVER SINK MIXER 1/2"**

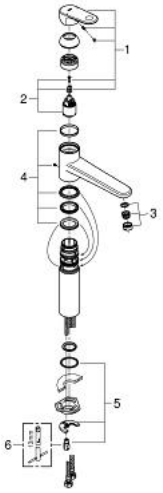

SPARE PARTS, January 2013 – now

1: Lever (Spare part-nr. 46651000)

2: Cartridge (Spare part-nr. 46374000)

3: Flow restrictor (Spare part-nr. 13929000)

4: Replacement kit for seal (Spare part-nr. 46429K00)

5: Shank mounting kit (Spare part-nr. 46249000)

6: Mounting wrench (Spare part-nr. 19017000)