31 613 DA0 **MINTA SMARTCONTROL SINK MIXER WITH SMARTCONTROL**

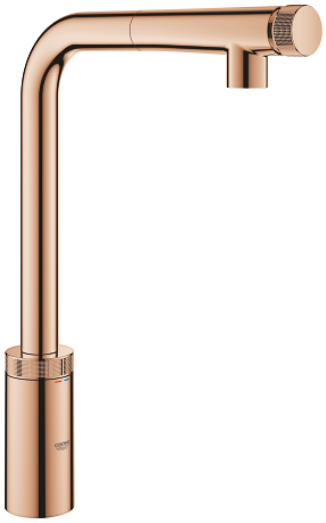

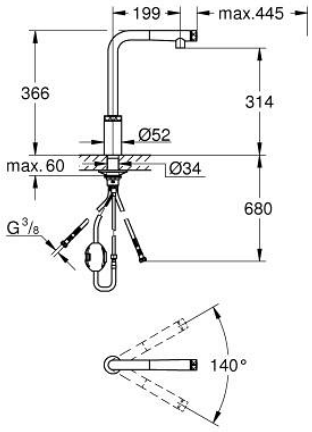

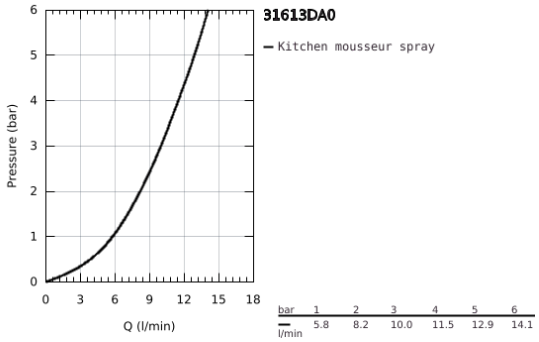

PRODUCT DESCRIPTION

- Colour: warm sunset
- monobloc installation
- GROHE Long-Life finish
- pull-out spray with laminar
- metal spray
- GROHE Magnetic Docking guarantees easy retraction and smooth docking of the spray head back to the starting position
- GROHE SmartControl push for ON-OFF, turn for volume adjustment from water saving eco mode to Full Flow
- temperature adjustment by turning of mixing valve on body
- swivel tubular spout
- swivel area 140°
- protected against backflow
- flexible connection hoses
- metal fixation set
- Lead and Nickel Free Inner Water Ways

31 613 DA0 **MINTA SMARTCONTROL SINK MIXER WITH SMARTCONTROL**

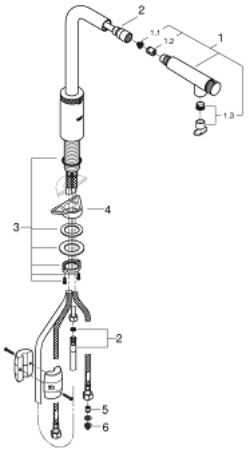

SPARE PARTS, July 2018 – October 2020

1: Hand shower (Spare part-nr. 48487DA0)

1.1: Strainer (Spare part-nr. 0676800M)

1.2: Non-return valve (Spare part-nr. 08565000)

1.3: Flow control set (Spare part-nr. 48470000)

2: Shower hose (Spare part-nr. 48488000)

3: Mounting set (Spare part-nr. 48477000)

4: Support plate (Spare part-nr. 05334000)

5: Non-return valve (Spare part-nr. 45881000)

6: Strainer (Spare part-nr. 0676800M)