31 128 DC1 **CONCETTO SINGLE-LEVER SINK MIXER 1/2"**

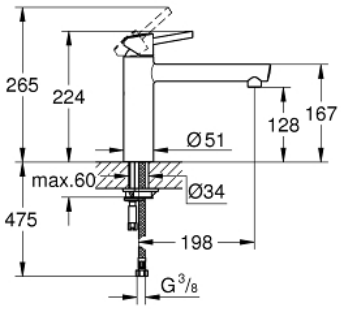

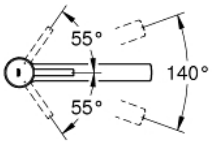

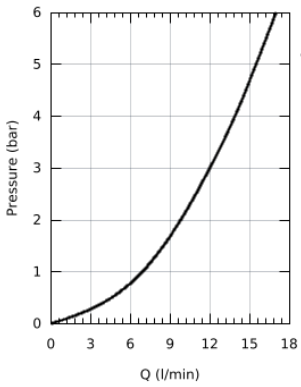

bar	1	2	3	4	5	6
l/min	6.9	9.8	12.0	13.9	15.5	17.0

PRODUCT DESCRIPTION

- Colour: supersteel
- medium spout
- monobloc installation
- GROHE Long-Life finish
- GROHE SilkMove 35 mm ceramic cartridge
- mousseur
- adjustable flow rate limiter
- swivel cast spout
- swivel area 140°
- flexible connection hoses
- rapid installation system
- maximum flow rate (at 3 bar): 12 l/min
- min. recommended pressure 0.2 bar

31 128 DC1 **CONCETTO SINGLE-LEVER SINK MIXER 1/2"**

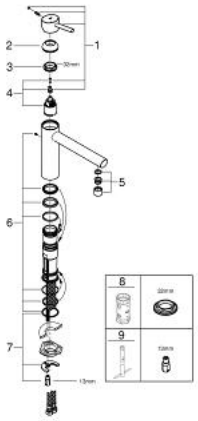

SPARE PARTS, January 2013 – now

1: Lever (Spare part-nr. 46822DC0)

2: Shield for cross handle (Spare part-nr. 46492DC0)

3: Screw ring (Spare part-nr. 46815000)

4: Cartridge (Spare part-nr. 46374000)

5: Flow restrictor (Spare part-nr. 06574DC0)

6: Replacement kit for seal (Spare part-nr. 46760000)

7: Shank mounting kit (Spare part-nr. 46249000)

8: Socket Spanner (Spare part-nr. 19332000)*

9: Mounting wrench (Spare part-nr. 19017000)*

* Optional accessories