30 596 000 **GROHE BLUE PURE START STARTER KIT WITH ACTIVATED CARBON FILTER**

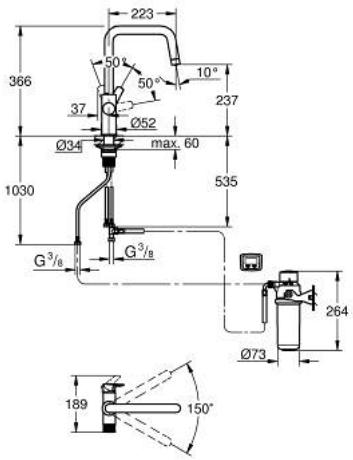

PRODUCT DESCRIPTION

- Colour: Chrome
- Consisting of:
- GROHE Blue single-lever sink mixer with filter function
- monobloc installation
- U spout
- separate handle for filtered water
- 28 mm ceramic cartridge with GROHE SilkMove
- swivel tubular spout
- swivel area 150°
- separate inner water ways for filtered and non-filtered water
- flexible connection hoses
- flexible QuickFix fixation
- GROHE Blue filter head
- GROHE Blue activated carbon filter for soft water areas below 9° dKH
- reduces substances responsible for unpleasant taste and odour, e.g. chlorine
- capacity 1500 l at 9° dKH
- time counter for filter lifetime measurement including 2 x AAA batteries