29 073 000 **RAINSHOWER F-SERIES ROUGH-IN SET SOUND SET**

PRODUCT DESCRIPTION
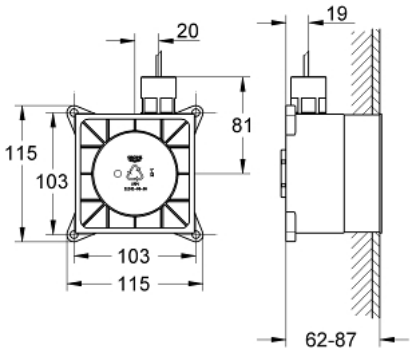
- Colour: Chrome
- for use with double sound modules (36 360 000)
- Consisting of:
- - 2 rough-in sets (115 x 115 x 62-87 mm)
- - 2 cable extensions (5 m each)
- - 1 Y-piece