24 049 LS3 **EUROSTYLE SINGLE-LEVER MIXER WITH 2-WAY DIVERTER**

PRODUCT DESCRIPTION

- Colour: moon white
- set for final installation for
- GROHE Rapido SmartBox 35 600/35 604
- GROHE SilkMove 46 mm ceramic cartridge
- GROHE Long-Life finish
- wall escutcheon with GROHE FastFixation(covered escutcheon- and shaft sealing, covered fixing)
- metal escutcheon, retroactively 6° adjustable
- metal lever
- automatic 2-way diverter
- flow performance: outlet B = 27 l/min, outlet C = 27 l/min
- without roughing-in-set

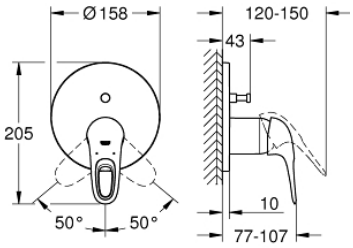

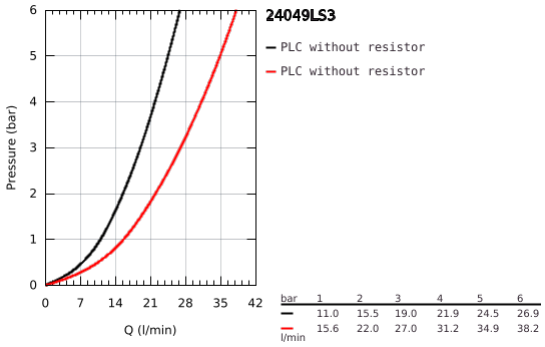

24 049 LS3 **EUROSTYLE SINGLE-LEVER MIXER WITH 2-WAY DIVERTER**

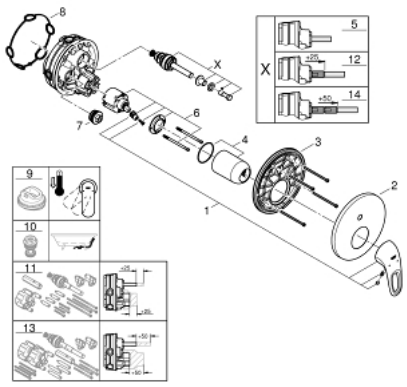

SPARE PARTS, July 2017 – now

1: Lever (Spare part-nr. 46940LS0)

2: Escutcheon (Spare part-nr. 48429LS0)

3: Mounting plate (Spare part-nr. 48440000)

4: Shield for cross handle (Spare part-nr. 02693LS0)

5: Diverter (Spare part-nr. 48442000)

6: Cartridge (Spare part-nr. 46048000)

7: Non-return valve (Spare part-nr. 49085000)

8: Sealing washer (Spare part-nr. 48360000)

9: Temperature limiter (Spare part-nr. 46308000)*

10: Backflow protection combination (DIN-EN1717) (Spare part-nr. 14055000)*

11: Universal extension set single-lever mixers, 25 mm (Spare part-nr. 1405600 0)*

12: Diverter (Spare part-nr. 48444000)*

13: Universal extension set single-lever mixers, 50 mm (Spare part-nr. 1405700 0)*

14: Diverter (Spare part-nr. 48445000)*

* Optional accessories