24 044 000 **EUROSMART COSMOPOLITAN SINGLE-LEVER SHOWER MIXER TRIM**

PRODUCT DESCRIPTION

- Colour: Chrome
- set for final installation for
- GROHE Rapido SmartBox 35 600/35 604
- GROHE SilkMove 46 mm ceramic cartridge
- GROHE Long-Life finish
- wall escutcheon with GROHE FastFixation(covered escutcheon- and shaft sealing, covered fixing)
- metal escutcheon, retroactively 6° adjustable
- metal lever
- flow performance: outlet B or C = 30 l/min
- without roughing-in-set

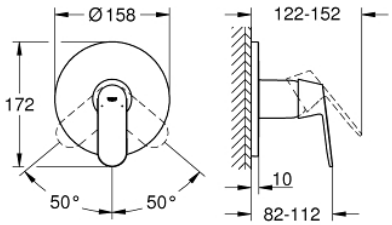

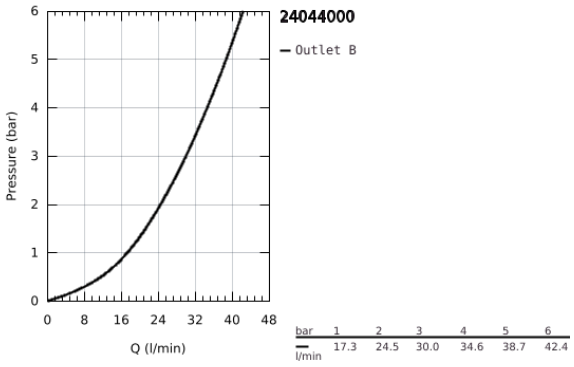

24 044 000 **EUROSMART COSMOPOLITAN SINGLE-LEVER SHOWER MIXER TRIM**

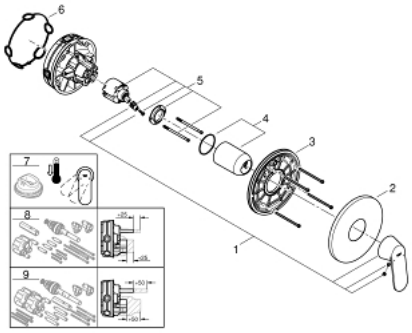

SPARE PARTS, July 2017 – now

1: Lever (Spare part-nr. 46682000)

2: Escutcheon (Spare part-nr. 48428000)

3: Mounting plate (Spare part-nr. 48439000)

4: Shield for cross handle (Spare part-nr. 02693000)

5: Cartridge (Spare part-nr. 46048000)

6: Sealing washer (Spare part-nr. 48360000)

7: Temperature limiter (Spare part-nr. 46308000)*

8: Universal extension set single-lever mixers, 25 mm (Spare part-nr. 14056000)*

9: Universal extension set single-lever mixers, 50 mm (Spare part-nr. 14057000)*

* Optional accessories