23 589 GN1 **ESSENCE BASIN MIXER 1/2" S-SIZE**

PRODUCT DESCRIPTION
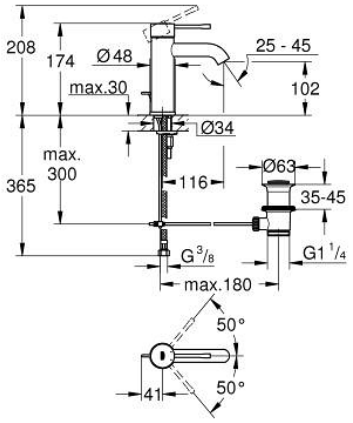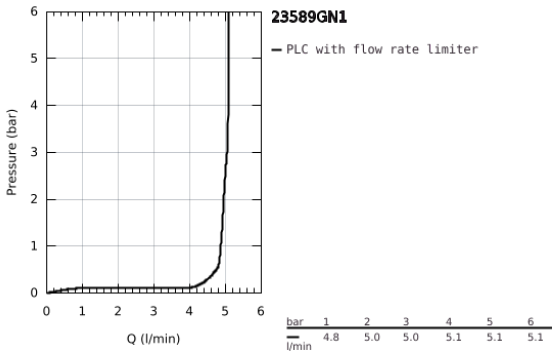
- Colour: brushed cool sunrise
- monobloc installation
- metal lever
- 28 mm ceramic cartridge with GROHE SilkMove
- with temperature limiter
- GROHE Long-Life finish
- GROHE Water Saving mousseur 5.7 l/min
- GROHE AquaGuide adjustable mousseur
- GROHE FastFixation Plus installation system
- pop-up waste set 1 1/4"
- flexible connection hoses