23 405 AL1 **LINEARE BASIN MIXER 1/2" XL-SIZE**

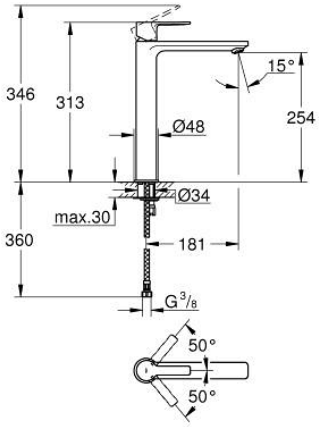

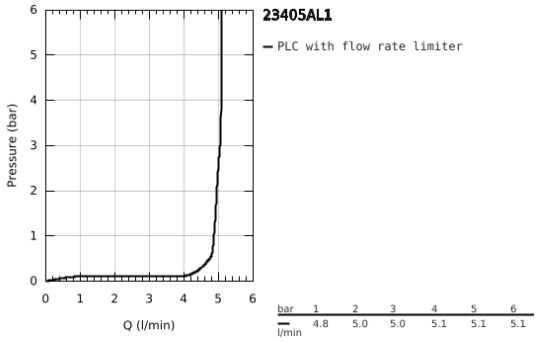

PRODUCT DESCRIPTION

- Colour: brushed hard graphite
- monobloc installation
- metal lever
- for free-standing basins
- 28 mm ceramic cartridge with GROHE SilkMove
- with temperature limiter
- GROHE Long-Life finish
- GROHE Water Saving - Less water, perfect flow
- maximum flow rate (at 3 bar): 5 l/min
- SpeedClean mousseur
- GROHE FastFixation Plus rapid installation system
- smooth body
- flexible connection hoses
- min. recommended pressure 0.2 bar

23 405 AL1 **LINEARE BASIN MIXER 1/2" XL-SIZE**

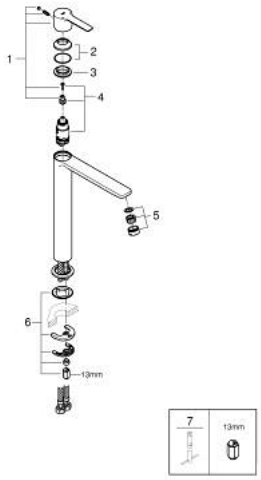

SPARE PARTS, March 2019 – now

1: Lever (Spare part-nr. 46980AL0)

2: Shield for cross handle (Spare part-nr. 46581AL0)

3: retaining ring (Spare part-nr. 07419000)

4: Cartridge (Spare part-nr. 46580000)

5: Flow restrictor (Spare part-nr. 48159AL0)

6: Shank mounting kit (Spare part-nr. 46645000)

7: Mounting wrench (Spare part-nr. 19017000)*

* Optional accessories