20 180 000 **VERIS THREE-HOLE BASIN MIXER 1/2" M-SIZE**

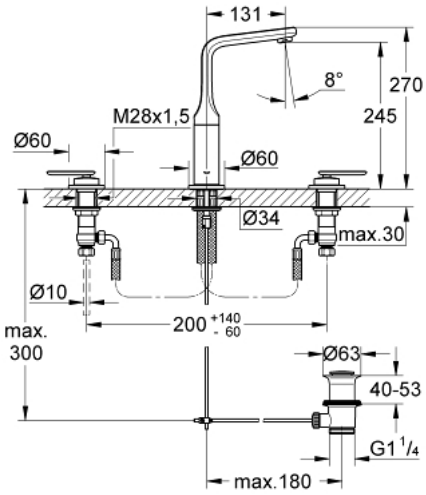

PRODUCT DESCRIPTION

- Colour: Chrome
- ceramic headparts 1/2", 90°
- GROHE Long-Life finish
- SpeedClean mousseur
- swivel spout
- stop limiter
- pop-up waste set 1 1/4"
- pressure-proof, flexible connection hoses between spout and side valves
- union nut with 10.5-mm drilling

20 180 000 **VERIS THREE-HOLE BASIN MIXER 1/2" M-SIZE**

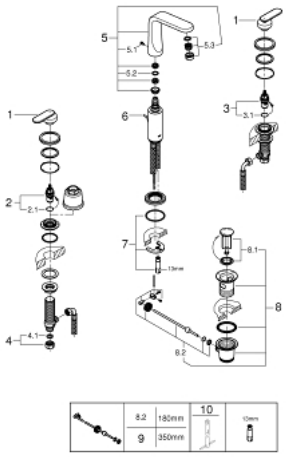

SPARE PARTS, September 2016 – now

1: Handle pair (Spare part-nr. 48305000)

2: Ceramic headpart, 1/2" (Spare part-nr. 45882000)

2.1: O-Ring Ø18,2 x Ø1,7 (Spare part-nr. 0392400M)

3: Ceramic headpart, 1/2" (Spare part-nr. 45883000)

3.1: O-Ring Ø18,2 x Ø1,7 (Spare part-nr. 0392400M)

4: Coupling nut 1/2" x 10.5 mm (Spare part-nr. 1290100M)

4.1: Fibre seal dia. Ø 18,5 x Ø 12 x 2 (Spare part-nr. 0138900M)

5: Biflo spout (Spare part-nr. 13246000)

5.1: set of screws (Spare part-nr. 46670000)

5.2: Sealing washer (Spare part-nr. 0128500M)

5.3: Flow straightener (Spare part-nr. 64447000)

6: Pop-up rod (Spare part-nr. 46739000)

7: Shank mounting kit (Spare part-nr. 46671000)

8: Pop-up waste set 1 1/4" (Spare part-nr. 28910000)

8.1: Chrome bath plug (Spare part-nr. 07182000)

8.2: Eccentric rod (Spare part-nr. 07052000)

9: Eccentric rod (Spare part-nr. 07341000)*

10: Mounting wrench (Spare part-nr. 19017000)*

* Optional accessories